Application and Cleaning of Filter Sleeves in Filter System

1. Function of filter sleeves
2. Types of filter sleeves
3. Used materials and treatment of filter sleeves
4. Ways of cleaning filter sleeves
   - Manual cleaning
   - Replacement of filter sleeves instead of cleaning
   - Cleaning machines
5. Construction and properties of cleaning machines
6. Expositions regarding the economic efficiency of replacement or cleaning of filter sleeves

Pict. 1 Air jet filter

1. Function of filter sleeves

Due to ever-present dust and dirt particles, the air used for the pneumatic delivery of the material to be conveyed in a grain or feed mill has to be purified. This happens by jet filters integrated in the system. The filter chamber holds a required number of cylindrical filter sleeves that are supported by filter cages. The dirty air flow s through the filter sleeves, w hich retain the particles. According to the environment the air supply may be built up w ith oil particles and/or humidity. The extracted particles stick to the to the tissue in a w ay to make cleaning indispensable. Very dirty filter sleeves also increase the pressure required by the ventilators for the circulation of air. The resistance of a dirty filter sleeve surface is considerable and may lead to trouble w ith the flow of the product.

Pict. 2 Filter sleeves and sleeve cage

2. Types of filter sleeves

Filter sleeves made of felt or filter cloth are normally obtained as tubular bodies. They are usually provided w ith bottom and fitted on sleeve cages. These are fixed on a bottom plate by various means of fixtures.

<u>Types of filter sleeves</u>

There are various types of filter sleeves. We distinguish betw een:

a) Filter sleeve w ith bottom and stitched seam
b) Filter sleeve w ith bottom and w elded (glued) seam
c) Filter sleeve w ith bottom, seamless

Types a) and b) are usually made of 'felt plates' cut to measure (width depending on diameter of sleeve and length of used filter). The plates are joined by a longitudinal seam that gives them their tubular shape. In a separate step the bottom of the filter is sewed in. With type a) this endless shape of a tube is obtained through a triple stitched seam made with a sewing machine. The seam of type b) is either welded or glued.
An interesting variant is type c). A seamless hose is knitted on a circular knitting machine, using a special polyester yarn.

Pict. 3 Various types of filter sleeves

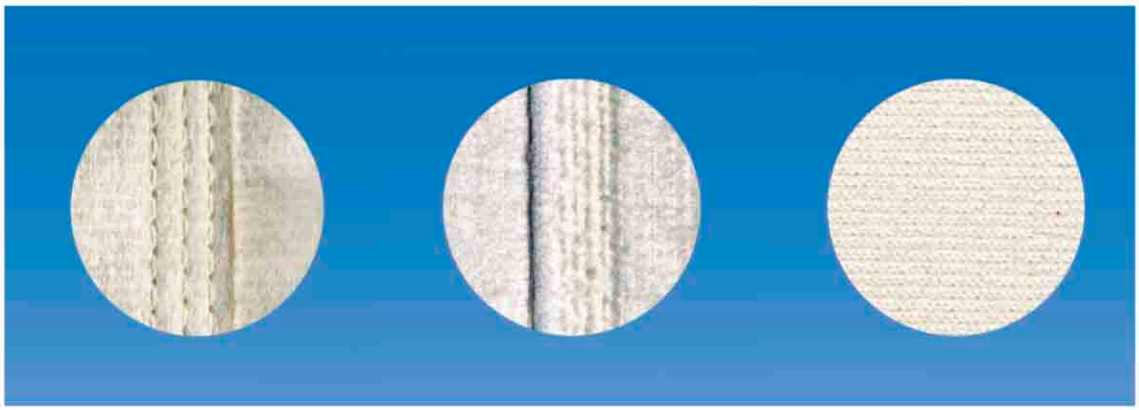

Type a) *Type b)* *Type c)*

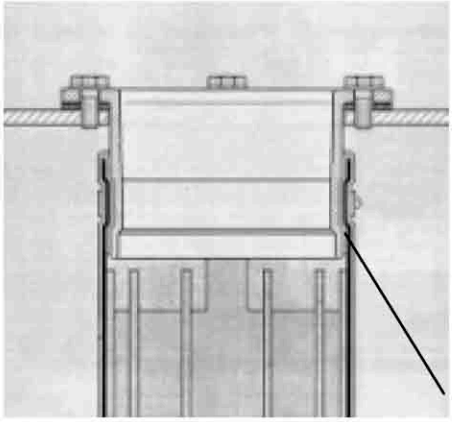

There are also bottomless filter sleeves. These are supplied as hose and fitted over a sleeve cage. This requires a sleeve cage with metal bottom. However, this version is controversial (leakage) and used very rarely.
In order to fix the sleeve at the cage, special holding devices have to be attached. Usually the sleeve is fastened to upper edge of the cage with a hose clamp.

Pict. 4 Fixing of the filter sleeve with hose clamp

Pict. 5 Filter sleeve with felt ring

Still another variant comes with a felt ring at the upper edge (see pict. 5). The felt ring is 'squeezed' into a matching device.

Choosing the most simple and economic type of filter sleeve for replacement also means to consider an execution that is easily accessible.

3. Used materials and treatment of filter sleeves

Special attention has to be given to the material of filter sleeves. On the one hand, all dust and dirt particles have to be retained; on the other hand a certain amount of purified air has to flow through the filter material. The porosity of the filter is a decisive factor for the volume of air to flow through a certain surface unit within a given space of time. The construction of the filter - be it felt or filter cloth - has to be conceived to meet these requirements. It also directly defines the necessary pressure for the air volume per unit of time. Integrated ventilators are producing this pressure, which determines the required air volume of the system.

If dirty filters increase the pressure, the ventilators' elevated performance requires adequate dimensioning. Regular cleaning of the filter sleeves is therefore a must. In addition, the cloth has to be protected from certain influence factors. A treatment of the fabric against charge accumulation is necessary (explosion hazard!). Further, a surface treatment is necessary to make the tissue resistant against oil and water residues carried by the airflow.

4. Ways of cleaning filter sleeves

As explained in the former chapter, regular cleaning of the filter sleeves is indispensable. The filter units offered by various manufacturers are equipped with an automatic cleaning system. It allows the cleaning of filter sleeves through a device integrated in the jet filter installation. Control valves mounted at the head of the filter reverse the supply of compressed air into the filter sleeves (see pict. 6), where the resulting pressure removes the collected particles to the outside. This method is not sufficient in the longer run. From time to time the filter sleeves have to be properly cleaned or exchanged.

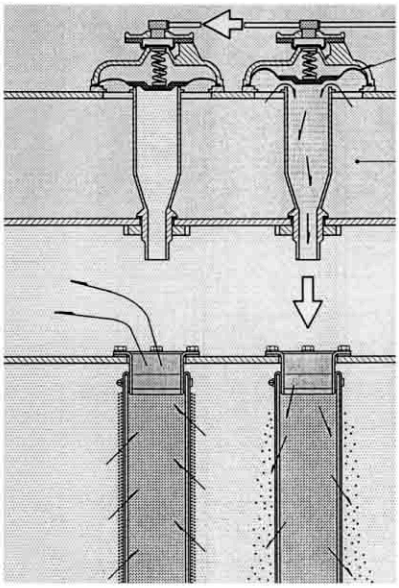

Pict. 6 Automatic filter cleaning system of filter installations

The various, often applied possibilities are the following:

- Manual cleaning
- Replacement of filter sleeves instead of cleaning
- Cleaning machines

4.1 <u>Manual cleaning:</u>

To this day, this is the most frequently used method. The filter sleeves, often together with their cages, are dismounted and manually cleaned. The cleaning procedure varies.

Particles may be removed with brushes. Washing of the sleeves is also quite common.

However, these procedures are time-consuming. Dismounting and mounting of the sleeves as well as the cleaning operation itself are quite expensive. In addition, the filter installation is standing still during the cleaning phase; this, too, has its price.

4.2 Replacement of filter sleeves

A quicker and often more convenient method than the one mentioned under # 4.1, is replacing the filter sleeves by new units. The cleaning operation doesn't apply and with it the cost of the machine-down time. The resulting cost of man-hours can be discounted.

4.3 Cleaning by filter cleaning machine

This third variant is a quite remarkable alternative. Such an appliance has an excellent cleaning capacity (up to 180 filter sleeves per hour) and can be used most efficiently (see pict. 7).

Pict. 7 Filter-cleaning machine

5. Construction and properties of cleaning machines

The concept of this machine allows the introduction of the filter sleeve complete with cage, i.e., the removal of the sleeve is unnecessary. The cleaning machine with its two motor-driven nylon brushes obtains two effects:

- mechanical → cleaning with brushes
- pneumatic → cleaning by aspiration

The brushes with nylon bristles are concave and adapt easily to the filter sleeves. They are adjustable, thus compensating the wear of the brushes. Their upright position allows precise control of the contact pressure.
The cleaning machine with its two motor-driven brushes cleans sleeve diameters of 120, 130, 140 and 150 mm. Filters can be cleaned 8 to 10 times. The concept provides easy, quick and dust-free cleaning.
The latch-type construction makes cleaning of the machine and changing of the brushes simple (see pict. 8). The brushes are driven by two motors.
The apparatus is designed as follows:

- solid machine frame
- dust collector with aspirator connection DN 120 mm
- latch covers with rotary brushes
- Air consumption is 14 m3/min.
- Voltage is adjusted according to customer's requirements

An extensive survey shows that the application of a filter cleaning machine is much more cost-effective than the manual cleaning of filter sleeves. The cleaning machine is available in the following executions:

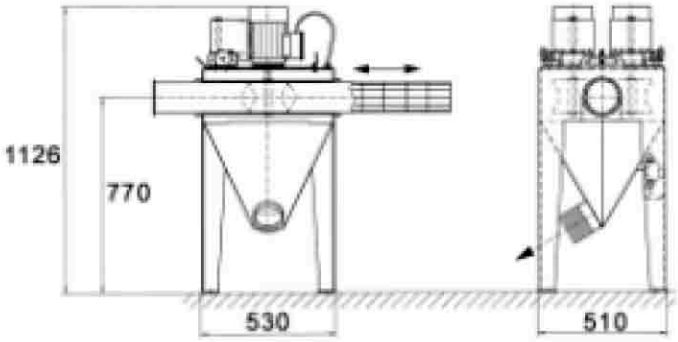

Pict. 9 Cleaning machine standard type LFSR-03

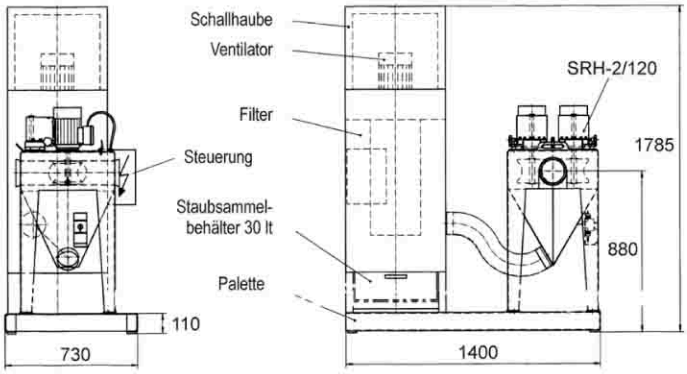

Pict. 10 Cleaning machine type LFSRF-03 with integrated dust filter.
Includes dust filter with sound absorbing hood.
Dust particles are separated by filter and admitted to dust collector

6. Expositions regarding the economic efficiency of replacement or cleaning of filter sleeves

The assumptions for this comparison correspond approximately with data collected in European, German speaking areas. They are adaptable from case to case, illustrating the outline of occurring costs.

Assumption:
During the cleaning and milling process, a mill with a capacity of 300t/24h uses approx. 336 filter sleeves with the following dimensions: Diameter 120 mm and length 2500 mm.

- Price for filter sleeve of such dimensions: approx. € 6,70/pce (standard price).
- Number of planned cleanings per year: 2
- Time consumption per filter with manual cleaning: approx. 10 minutes (incl. dismounting and mounting of filter sleeves)
- Time consumption for removal of filter with cage (snap buckle), introduction in cleaning machine and re-mounting: approx. 4 minutes
- Hourly rate of employee: approx. € 30/h

6.1 Cost of manual cleaning

Occurring cost per year according to the above assumption:

- For 336 filter sleeves and a time consumption for manual cleaning
  336 filter sleeves x 10 min = 3360 min. or 56 hours
- 56 h. x 2 (number of planned cleanings per year) x € 30/h (hourly rate of employee)
  ~ € 3360/year

6.2 Cost of cleaning with filter-cleaning machine

Occurring cost per year according to the above assumption using a cleaning machine:

- For 336 filter sleeves and a time consumption for removal, introduction and re-mounting:
  336 filter sleeves x ca. 4 min. = 1344 min or 22.4 hours
- 22,4 h. x 2 (number of planned cleanings per year) x € 30/h (hourly rate of employee)
  ~ € 1344/year.

6.3 Cost comparison between manual cleaning (# 6.1) and machine cleaning (# 6.2)

From the cost of manual and machine cleaning as established under # 6.1 and # 6.2 results the following comparison:

- Yearly cost with manual cleaning	approx. € 3360
- Yearly cost with machine cleaning	approx. € 1344
- Difference	€ 2016

i.e., by using machine cleaning, a saving of € 2016 is achieved.
The price of € 4000 (standard price) for a filter-cleaning machine is paid off within a 2 years period.

6.4 Cost of replacement of filter sleeves

Assuming that filter sleeves are replaced twice a year instead of cleaned, the following calculation can be made:

- Cost of buying new filter sleeves:
  336 Filter sleeves x 2 (exchanges per year) x approx. € 6.70 ~ € 4500
- Yearly cost of time consumption for exchange 22 Std. x 2 (exchanges per year) x € 30 (hourly rate of employee) ~ € 1320

Total amount ~ € 5820/year
The exchange of filter sleeves is therefore the most expensive variant.

These calculations do not consider the machine-down time. With manual cleaning, it is approx. 2,5 x higher than with machine cleaning.
With the replacement of the sleeves, the machine-down time to be considered is about the same as with machine cleaning.
Although the assumption of time consumption, hourly rates of employees and purchase price of filter sleeves may vary depending on approach, machine cleaning of filter sleeves shows in tendency that this method has to be regarded as the most cost-effective.

Reinach, October 2002
Carlo Lupi of Mesma Trading AG / Switzerland